TERMS OF USE Disclaimer: This information is intended solely as a guide for use of Ross Roof Group products. Before using you should ensure that the product is suitable for use in the specific application. Nothing in this information constitutes a statement of fitness for particular purpose and appropriate expert advice is to always be obtained. Ross Roof Group makes no warranty regarding the use of this information with non - Ross Roof Group products. This drawing is the property of Ross Roof Group. It cannot be copied in any form and must be returned to Ross Roof Group upon request.

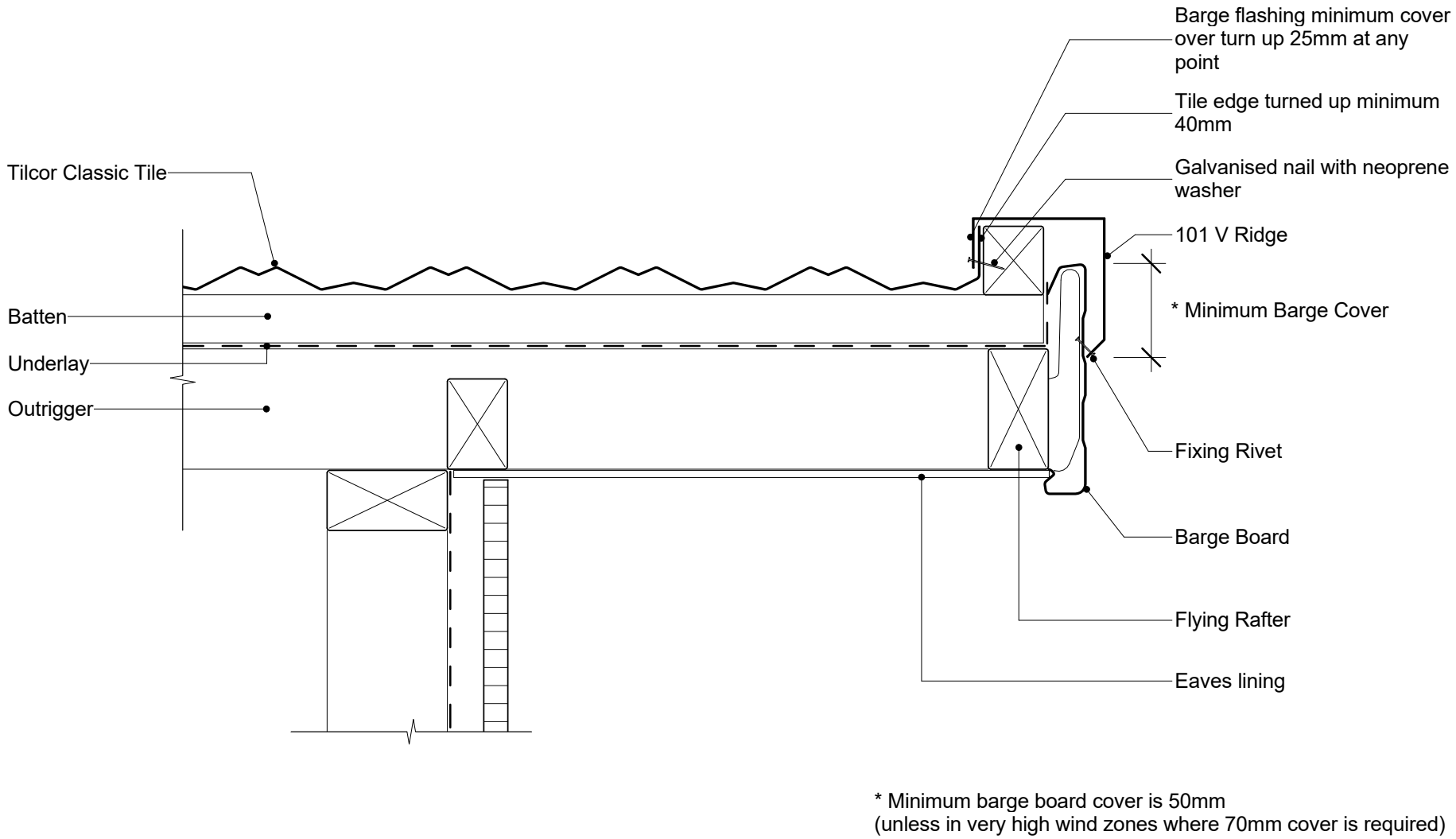

* Minimum barge board cover is 50mm
(unless in very high wind zones where 70mm cover is required)

© copyright 2015 Ross Roof Group

TILCOR ROOFING SYSTEMS

Classic

Gable-Barge Detail

External Metal Fascia With V Trim

File: tilcor cl192 - external metal fascia with v trim	
Revision: 00	Source:
Scale: 1 : 5	Reference
Date: 5 Nov 2015	CL192